702580 / FS6AL007CP

Single Handle Lavatory Faucet



How to order replacement parts:

To order replacement parts call our toll free customer service line at **1-866-789-2273** or your local costco representative.

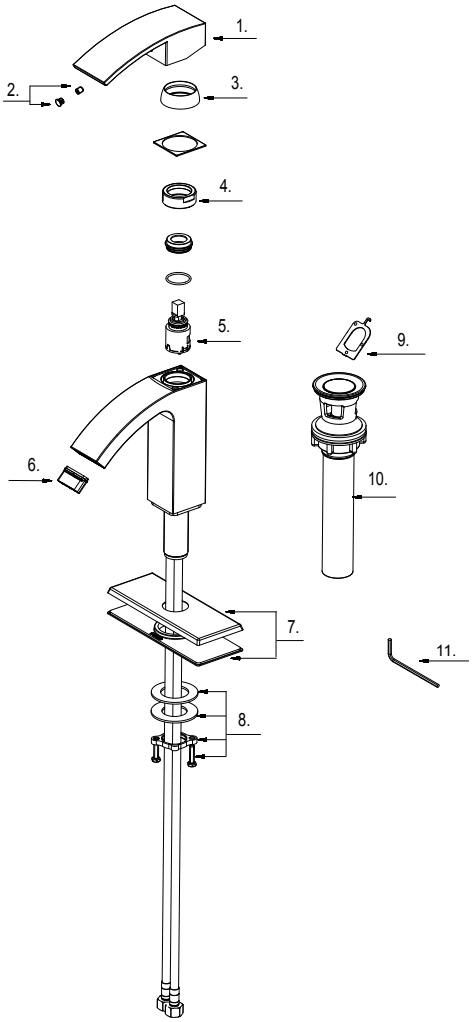

1	Metal handle	A069757
2	Index Button	A66D806
3	Trim Cap	A103363
4	Locking Nut	A104045
5	Ceramic Cartridge	A507084N
6	Aerator	A553038N
7	Cover Plate & Putty Plate	A663245-T
8.	Mounting Hardware	A663221
9	Aerator removal tool	A031255
10	Pop up assembly	A505207
11	Hex Wrench (H 2 * 17 mm L * 49 mm L)	A031003NI